MADRIO

ZACK follow your style

1

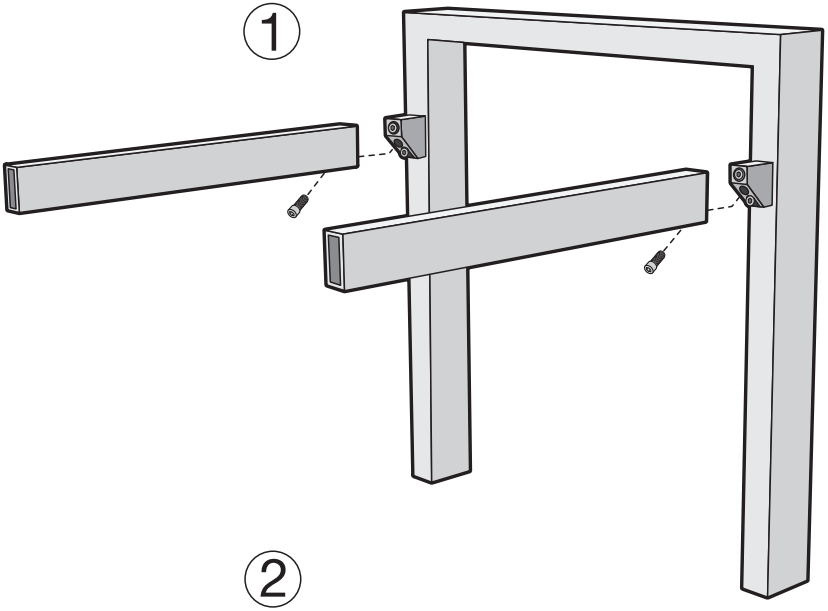

2

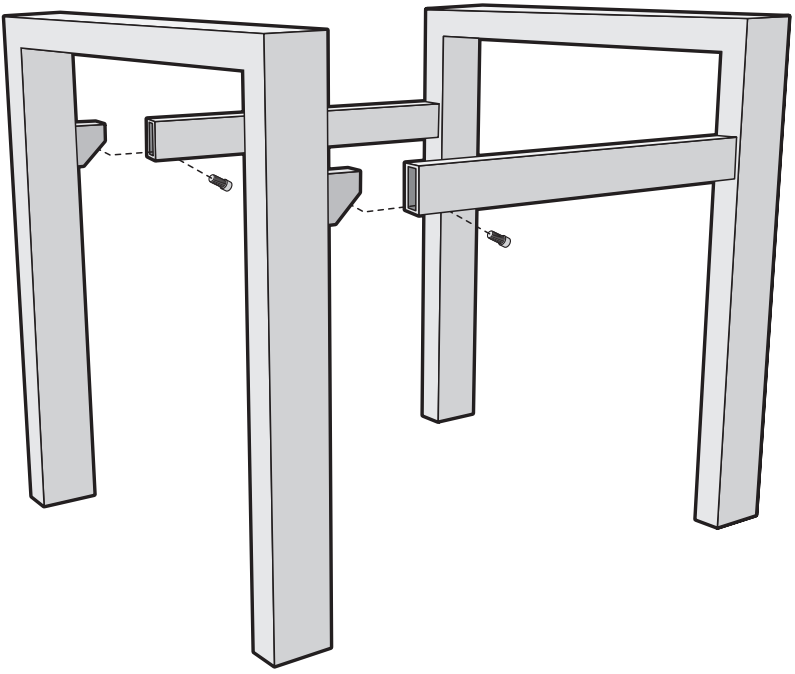

© 2009

ZACK GMBH . GERMANY . WWW.ZACK.INFO

50753 / 50758

MADRIO

ZACK follow your style

3

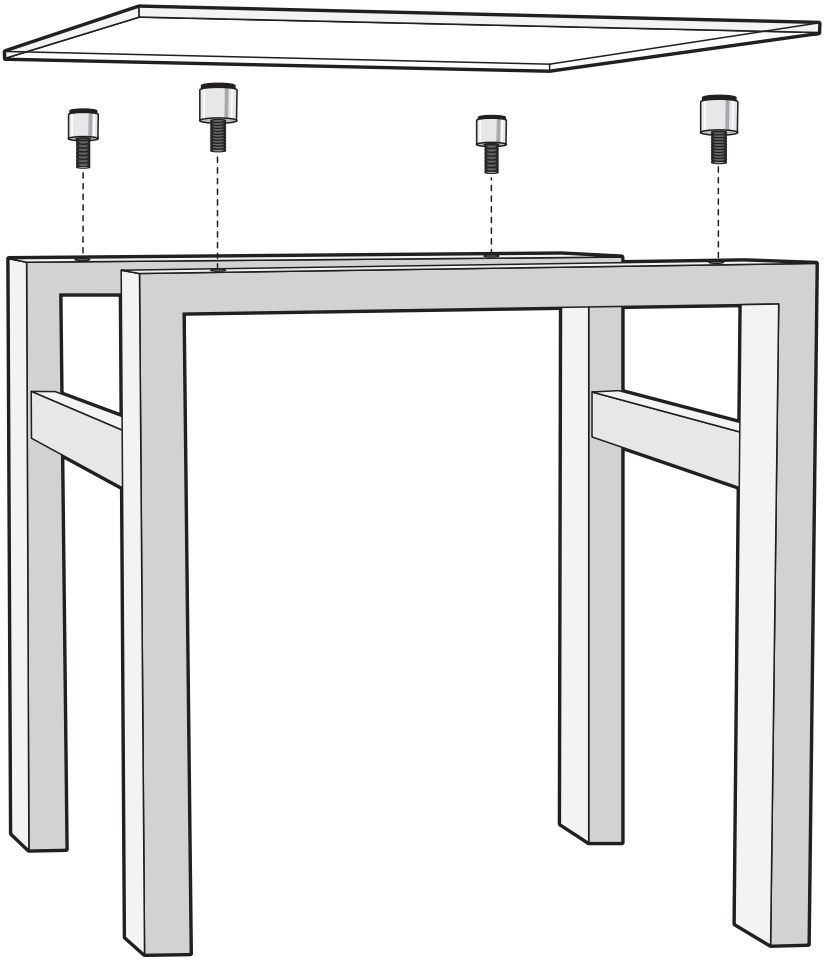

© 2009

50753 / 50758